Installation Instruction



XND



XNR



XNF

XENA SERIES

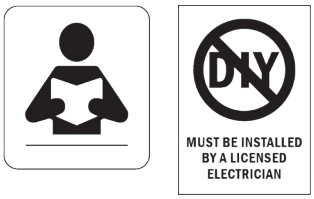

- Read all instructions to prevent injury, electric shock or damage due to fire or mechanical hazards.
- See product label for supply specifications.

Storage:
Prior to installation products are to be stored in cool and dry conditions.

Application:
The installation application and orientation of the product is designed in accordance with the nominated product IP rating, class designation. Installation environments outside these conditions are not recommended. The product is designed to be installed in the horizontal orientation only.

Cautions:

- Electronic control equipment must not be subjected to high voltages, DO NOT MEGGER between Live and Neutral.
- All cable/conduit terminations must be installed in accordance with the designated IP rating of this product.
- Suitable installation fastening methods should be employed to ensure the mounting points are not damaged when subjected to vibration and or movement.
- This light source of this luminaire is not replaceable. When the light source reaches it end of life, the whole luminaire shall be replaced.
- The light source contained in this luminaire shall only be replaced by the manufacturer or his service agent or similar qualified person.
- This luminaire cannot be disassembled by non-professional.
- This luminaire must be installed by qualified electrician in accordance with local rules and codes.

Dimensions:

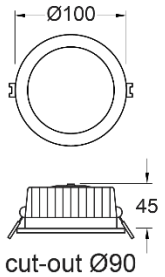

XND4/XNR4/XNF4

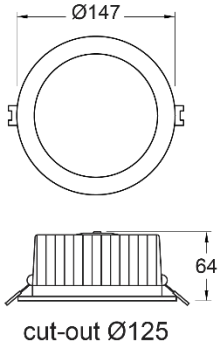

XND5/XNR5/XNF5

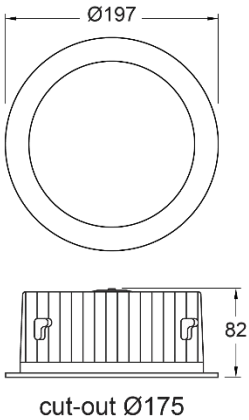

XND6/XNR6/XNF6

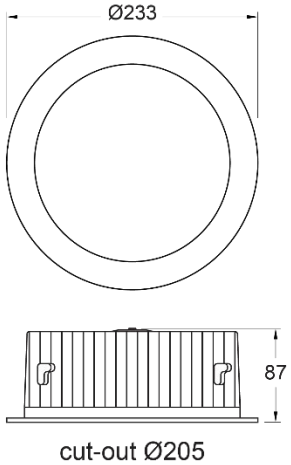

XND8/XNR8/XNF8

Installation

a) **XND4, XNR4 & XNF4**

b) **XND5, XNR5 & XNF5**

1. Turn OFF the main supply.

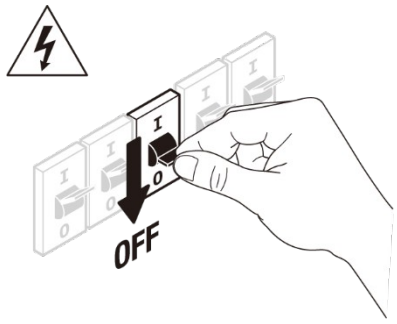

2. Cut out ceiling hole as per dimension given.

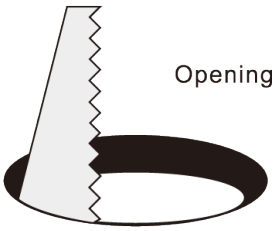

3. If product supplied with flex and plug, connect plug to socket. Ignore this step if flex & plug unavailable.

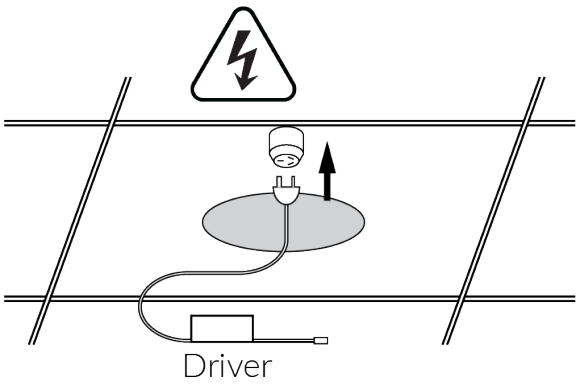

4. Connect the DC cable from driver to downlight then connect mains supply.

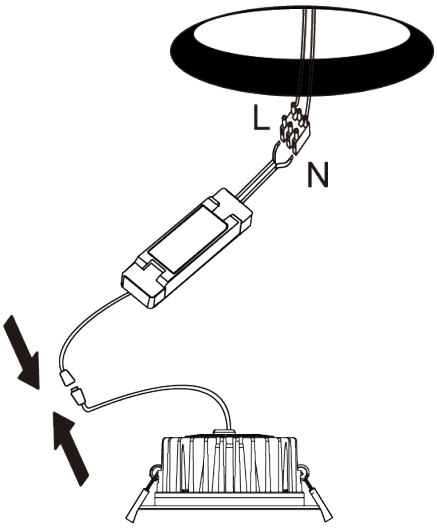

5. Fold up springs and fix downlight into cut out hole.

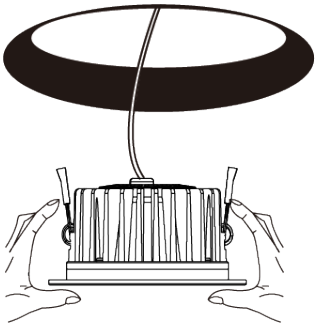

6. Turn ON the main supply.

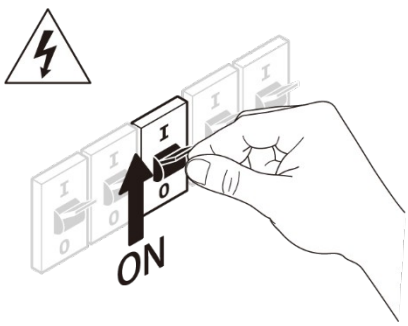

Installation

c) XND6, XNR6 & XNF6

d) XND8, XNR8 & XNF8

1. Turn OFF the main supply.

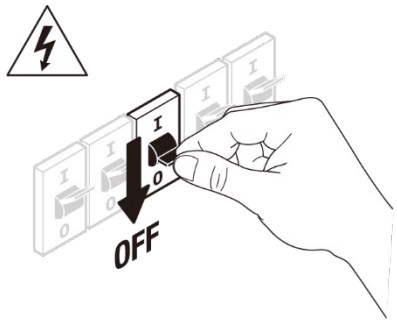

2. Cut out ceiling hole as per dimension given.

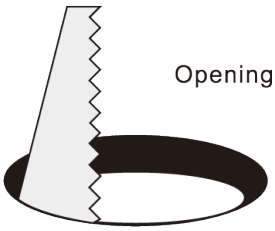

3. Remove downlight ring.

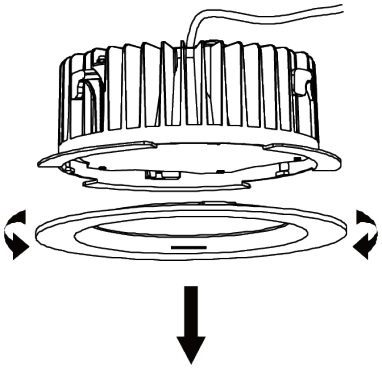

4. If product supplied with flex and plug, connect plug to socket. Ignore this step if flex & plug unavailable.

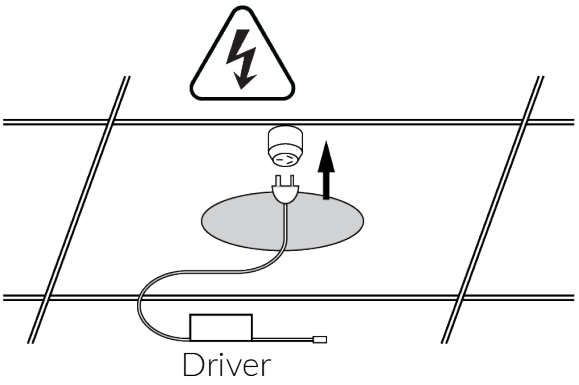

5. Connect the DC cable from driver to downlight then connect mains supply.

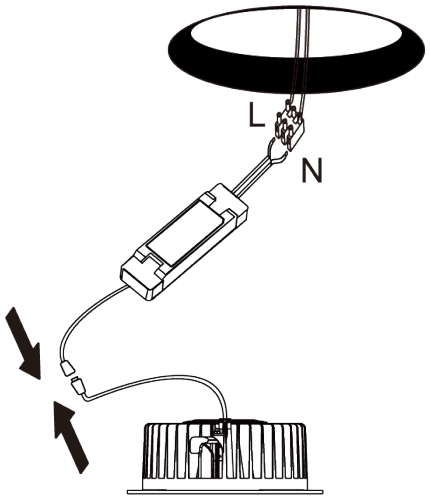

6. Fix downlight into cut out hole.

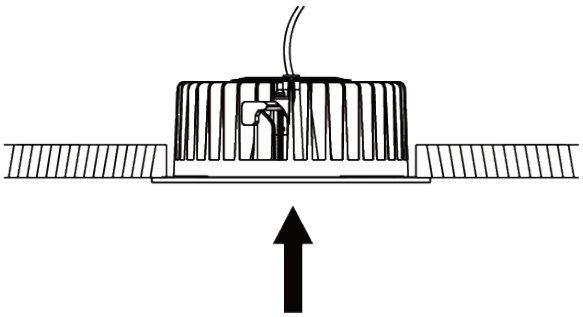

7. Secure downlight properly and tighten screw.

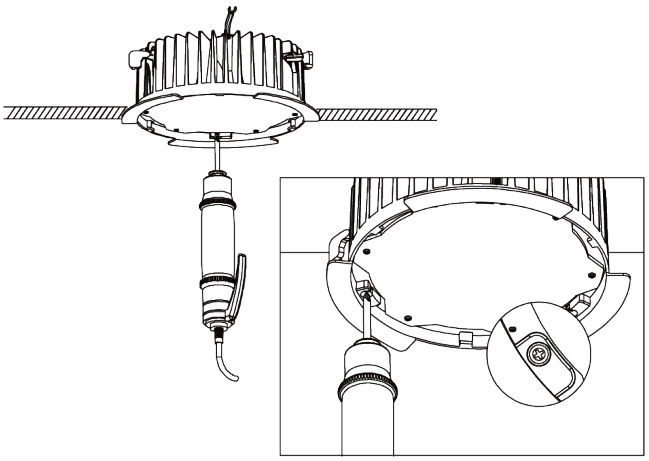

8. Replace downlight ring.

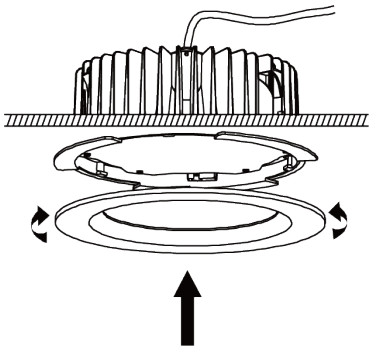

9. Turn ON the main supply.

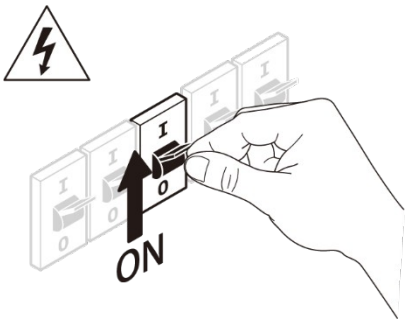

Only XND4, XNR4 & XNF4 is IC-4 rated No cover allowed for: XND5, XNR5 & XNF5 XND6, XNR6 & XNF6 XND8, XNR8 & XNF8	Dimmer connection (Trailing-edge):
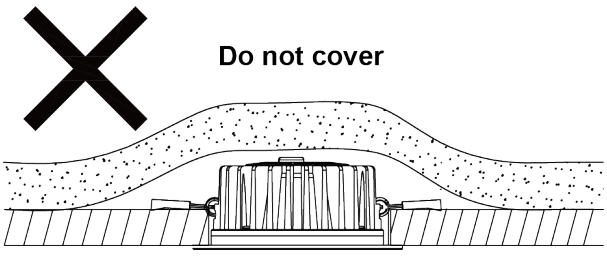	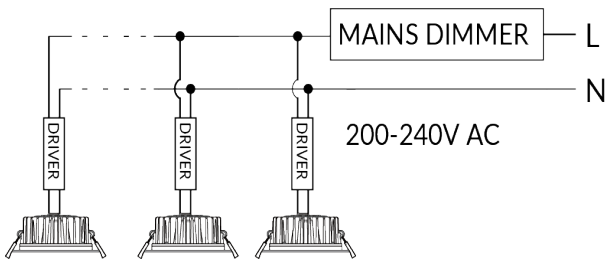

IP20 IP44 IP20 IP65 IK05 IC-4 INDOOR

XND4, XNR4 & XNF4 only