KEYSTONE SLK

Urban Streetlight

230830

Installation Instructions

This installation guide is valid for the following models:

- Keystone - SLK

PRIOR TO INSTALLATION

- Read all instructions to prevent injury, electric shock or damage due to fire or mechanical hazards
- See product label for supply specifications
- Suitable for recessed or suspension mounting

MUST BE INSTALLED BY A LICENSED ELECTRICIAN

Inspect the luminaire and associated parts for any signs of defect, in particular fasteners, cables and the diffuser or glass lens

DO NOT INSTALL THE LUMINAIRE IF IT APPEARS IN ANY WAY FAULTY

Consult with the supplier / sales office for details regarding replacement

CAUTION

- Before commencing installation, turn off and isolate the electrical supply.
- Electronic control equipment must not be subjected to high voltages. DO NOT MEGGER between Live and Neutral.
- All cable / conduit terminations must be installed in accordance with the designated IP rating of this product.
- Suitable installation fastening methods should be employed to ensure the mounting points are not damaged when subjected to vibration and / or movement.
- This luminaire must be installed by qualified electrician in accordance with local rules and codes.
- This luminaire cannot be disassembled by non-professional persons.
- Prior to installation, products are to be stored in cool dry conditions.
- The light source contained in this luminaire shall only be replaced by the manufacturer or his service agent or a similar qualified person.
- If the external flexible cable or cord of this luminaire is damaged, it shall be exclusively replaced by the manufacturer or his service agent or a similar qualified person in order to avoid hazard.

INSTALLATION

1. Loosen the arm's screws to adjust desired angle (adjustable between -20° and 20°).

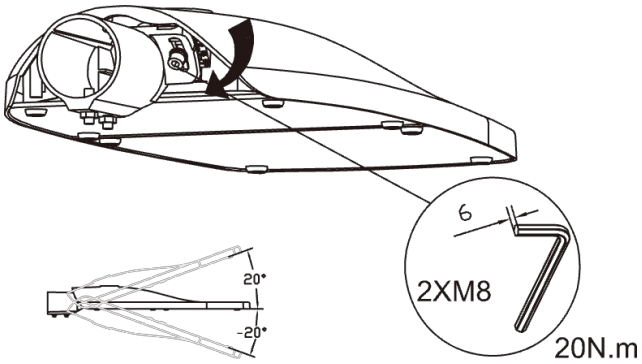

2. Loosen cover screws to access gear compartment.

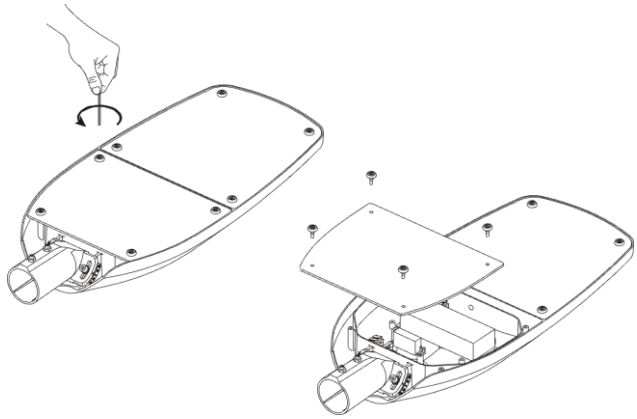

3. Connect the cable accordingly.

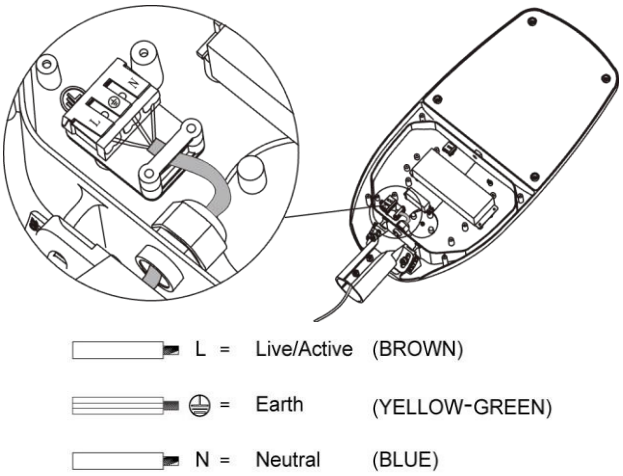

4. Replace cover and tighten all screws.

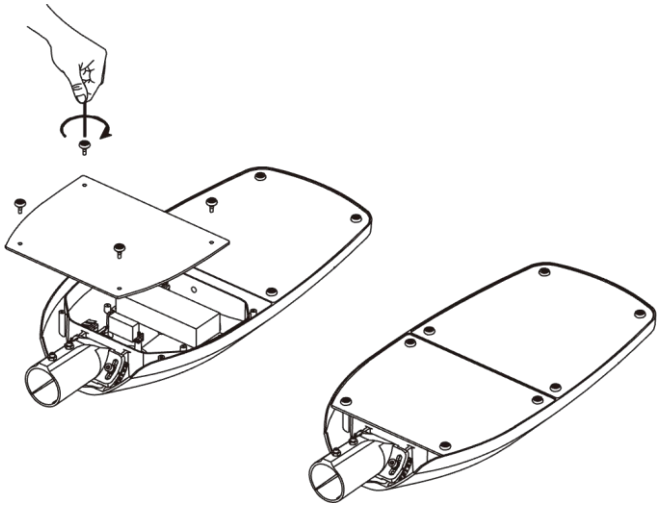

5. Attach the luminaire's arm to the pole, then tighten it.

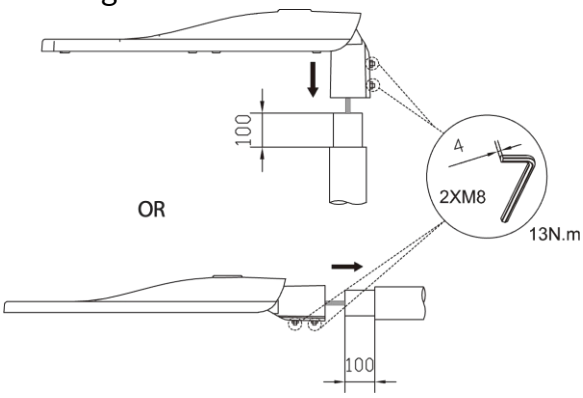

Pole diameter = Ø60mm

Unauthorized modification & improper installation void product warranty.

DIMENSIONS

SLK30 / SLK50 / SLK75

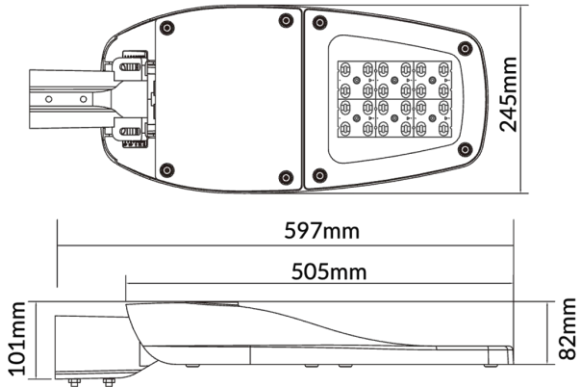

SLK100 / SLK120 / SLK150 / SLK180

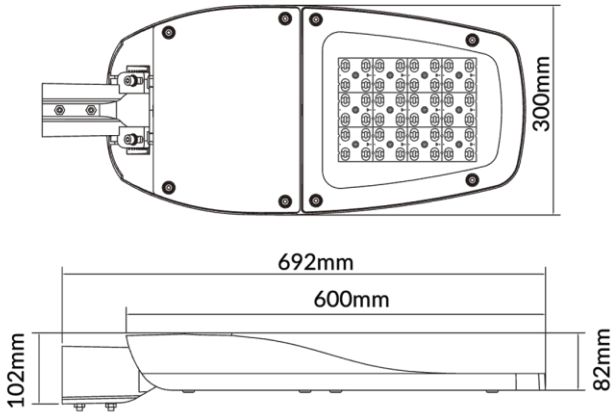

MAINTENANCE

The supply must be isolated before opening or accessing the luminaire. Product maintenance is critical to the products designed performance. Davis Lighting is not responsible for any product not maintained in accordance with the recommended procedure or intervals. It is recommended that a bi-annual cleaning cycle is implemented. Inspect optical surfaces for damage or crack. Products supplied with visors or covers must not be operated with a damaged visor or cover; it is recommended damaged visors or covers to be replaced by a competent person immediately. Seals and electrical components such as wirings to be checked for deterioration.

IP 66 IK09 OUTDOOR

All photometric and electrical data published are of ±10% tolerance. Characteristics and specifications may change without notice. All electrical installations / connections should be carried out by a suitably qualified person. Application images are indicative only and may not contain actual Davis product. The information contained in this publication is typical and must not be interpreted as a guarantee of individual product performance.

This product may contain substances that can be hazardous to the environment if not disposed of correctly. Electrical and electronic equipment should never be discarded along with general waste but should be separated for correct treatment and recovery. Packaging and waste materials should be recycled wherever possible.