Skye

Interior Lighting / UFO Highbay IP65

Features

Unique & modern design
High ambient temperature rating
Instant start-up (no flickering or humming)
Surface or pendant mounting (eye bolt supplied)
Sensor optional



Applications

LED Highbay is designed to use for factories, warehouses, function halls, exhibition halls, retails outlet and etc

Standards

EN55015	Radio disturbance emissions
EN61000-3-2	Limited for harmonic emissions
EN61347-1-2-13	LED Modules for general & safety
EN61547	Immunity requirements
EN62471	Photobiological safety of lamps and systems







Specification

Housing Material	Die-cast aluminium alloy body
Finishing	Epoxy powder-coating black
Optics	PC lens
Reflector	Aluminium (optional)
Input Voltage	100-277Vac
Frequency	50/60Hz
Power factor	>0.95
Typ. CRI (Ra)	>80, >90 optional
IP Rating	IP65
IK Rating	IK08
Rated Life Span	>50,000hrs
Driver option	ON/OFF, 1-10v dimming, DALI

Mounting

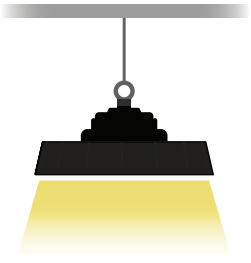

Pendant

IP65 INDOOR

Skye

Interior Lighting / UFO Highbay IP65

Dimensions

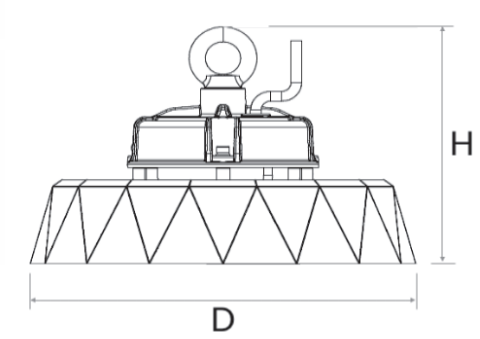

Model	Nominal Power (W)	LED Lumen (lm)	Colour Temp. (K)	Beam Angle (°)	Dimension DxH (mm)	Mounting
SKYE-80W	80	12000	3000/4000/6500	60/90/120	262x172	surface
SKYE-100W	100	15000	3000/4000/6500	60/90/120	262x172	surface
SKYE-120W	120	18000	3000/4000/6500	60/90/120	301x172	surface
SKYE-150W	150	22500	3000/4000/6500	60/90/120	301x172	surface
SKYE-200W	200	30000	3000/4000/6500	60/90/120	350x172	surface
SKYE-240W	240	36000	3000/4000/6500	60/90/120	350x172	surface

Note: The light source contained in this luminaire shall only be replaced by the manufacturer or his service agent or similar qualified person.

All photometric and electrical data published are of ±10% tolerance. Characteristics and specifications may change without notice. All electrical installations / connections should be carried out by a suitably qualified person. Application images are indicative only and may not contain actual Davis product. The information contained in this publication is typical and must not be interpreted as a guarantee of individual product performance.

Opti Pro Sdn Bhd (1455077-V)
No 16, Jalan Putra Mahkota 7/8D, Putra Heights,
47650 Subang Jaya, Selangor Darul Ehsan, Malaysia
optipro.sdn.bhd@gmail.com +60-11-8888 3045