Utofia UFA

Interior Lighting / UFO Highbay IP65

Features

High lighting efficacy 160lm/w (190lm/w optional)
High ambient temperature rating & good heat dissipation
Instant start-up (no flickering or humming)
Pendant or trunnion mounting (eye bolt supplied)
Microwave or PIR motion sensor, Casambi node optional



Applications

LED Highbay is designed to use for factories, warehouses, function halls, exhibition halls, retails outlet and etc

Standards

EN55015	Radio disturbance emissions
EN61000-3-2	Limited for harmonic emissions
EN61347-1-2-13	LED Modules for general & safety
EN61547	Immunity requirements
EN62471	Photobiological safety of lamps and systems





Specification

Housing Material	Aluminium alloy body
Finishing	Powder-coating black (RAL9017)
Optics	Polycarbonate lens
Input Voltage	120-277Vac
Frequency	50/60Hz
Operating temp.	-30°c to +50°c
Operating humidity	5-90%
Power factor	>0.95
Typ. CRI (Ra)	>80
IP Rating	IP65
IK Rating	IK08
Rated Life Span	>100,000hrs (L80B20@25°c)
Driver option	ON/OFF, 0-10v dimming
Electrical Class	Class 1

Mounting

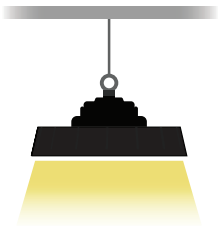

Pendant

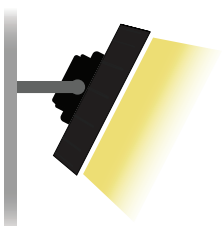

Trunnion

IP65 IK08 INDOOR

Utofia UFA

Interior Lighting / UFO Highbay IP65

Dimensions

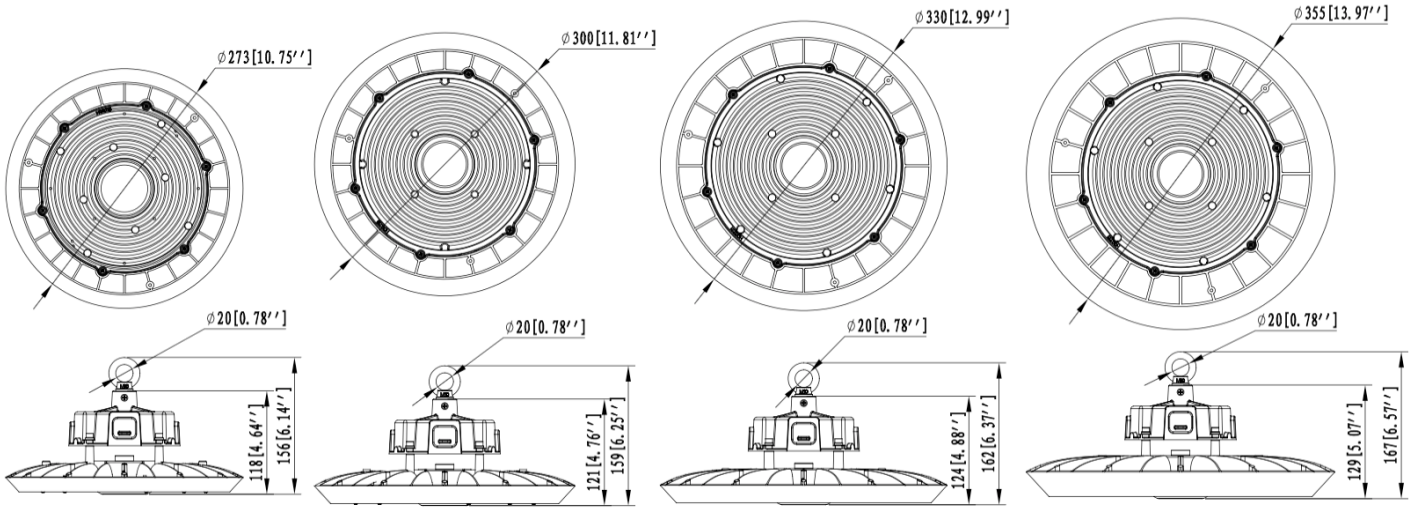

100w 150w 200w 240w

Model	Nominal Power (W)	LED Lumen (lm)	Colour Temp. (K)	CRI (Ra)	Beam Angle (°)	Weight (kg)
UFA100	100/80/60	16000	3000/4000/6000	80	60/85/115	1.8
UFA150	150/120/90	24000	3000/4000/6000	80	60/85/115	2.0
UFA200	200/160/120	32000	3000/4000/6000	80	60/85/115	2.3
UFA240	240/190/145	38400	3000/4000/6000	80	60/85/115	2.6
UFA100H	100/80/60	20000	3000/4000/6000	80	60/85/115	1.8
UFA150H	150/120/90	30000	3000/4000/6000	80	60/85/115	2.0
UFA200H	200/160/120	40000	3000/4000/6000	80	60/85/115	2.3
UFA240H	240/190/145	46800	3000/4000/6000	80	60/85/115	2.6

Note: The light source contained in this luminaire shall only be replaced by the manufacturer or his service agent or similar qualified person.

Utofia UFA

Interior Lighting / UFO Highbay IP65

Accessories



PC reflectors
90° PC reflector with lid

Code: H00C73A+H00C01B (100W-150W)
Code: H00C01A+H00C01B (200W-240W)



Aluminum Reflector
90° AL reflector

Code: H00D05-01 (100W-150W)
Code: H00D02 (200W-240W)



Safety chain
201 stainless steel, available for 0.5m long.

Code: SC-H54-01



Zhaga
Zhaga PIR Motion Sensor, IP65

Code: HD06VCRH 7C



Zhaga
Zhaga Microwave Motion Sensor, IP65

Code: HD06VCRH 7B



Zhaga
CASAMBI ready wireless module, IP65

Code: UP-CZ01



Remote controller
For
HD06VCRH 7B
HD06VCRH 7C

Code: HD06R



±30° adjustable bracket
SPCC materials with outdoor powder coating.

Code: BC-H27-01

All photometric and electrical data published are of ±10% tolerance. Characteristics and specifications may change without notice. All electrical installations / connections should be carried out by a suitably qualified person. Application images are indicative only and may not contain actual Davis product. The information contained in this publication is typical and must not be interpreted as a guarantee of individual product performance.

Opti Pro Sdn Bhd (1455077-V)
No 16, Jalan Putra Mahkota 7/8D, Putra Heights,
47650 Subang Jaya, Selangor Darul Ehsan, Malaysia
optipro.sdn.bhd@gmail.com +60-11-8888 3045