This installation guide is valid for the following models:

- Utofia UFA



PRIOR TO INSTALLATION

- Read all instructions to prevent injury, electric shock or damage due to fire or mechanical hazards
- See product label for supply specifications



Inspect the luminaire and associated parts for any signs of defect, in particular fasteners, cables and the diffuser or glass lens
DO NOT INSTALL THE LUMINAIRE IF IT APPEARS IN ANY WAY FAULTY
Consult with the supplier / sales office for details regarding replacement

CAUTION

- Before commencing installation, turn off and isolate the electrical supply
- Electronic control equipment must not be subjected to high voltages. DO NOT MEGGER between Live and Neutral
- All cable / conduit terminations must be installed in accordance with the designated IP rating of this product
- Suitable installation fastening methods should be employed to ensure the mounting points are not damaged when subjected to vibration and / or movement
- This luminaire must be installed by qualified electrician in accordance with local rules and codes
- This luminaire cannot be disassembled by non-professional persons
- If the external flexible cable or cord of this luminaire is damaged, it shall be exclusively replaced by the manufacturer or his service agent or a similar qualified person in order to avoid a hazard
- The light source contained in this luminaire shall only be replaced by the manufacturer or his service agent or a similar qualified person
- Prior to installation, products are to be stored in cool dry conditions

DIMENSIONS

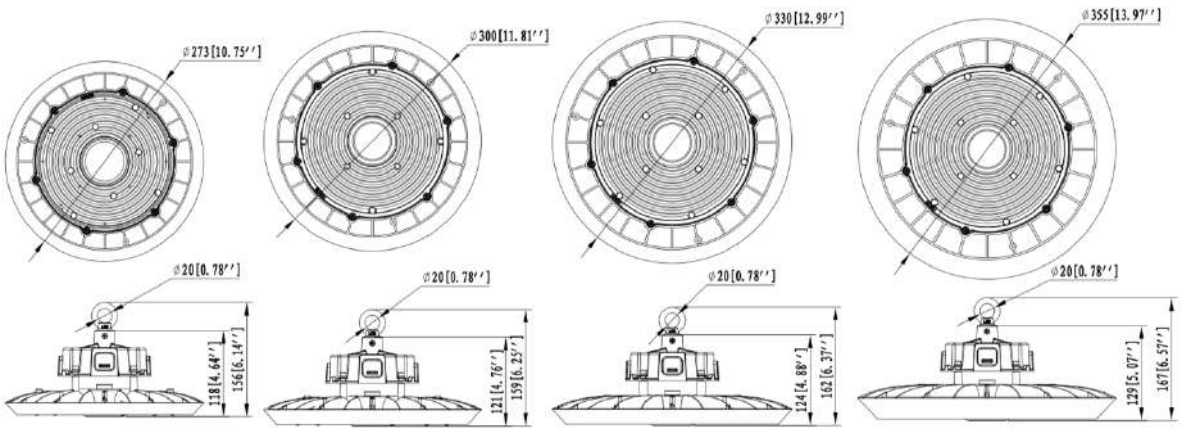

100W 150W 200W 240W

Product Specifications		100W	150W	200W	240W
Input Voltage		100-277VAC / 120-277VAC / 100-240VAC / 220-240VAC (Subject to the input voltage on nameplate)			
Power Frequency		50 / 60 Hz			
Outlook Dimensions	No receptacle	Ø273x156mm (10.75"x6.14")	Ø300x159mm (11.81"x6.25")	Ø330x162mm (12.99"x6.37")	Ø355x167mm (13.97"x6.57")
	Zhaga receptacle	Ø273x170mm (10.75"x6.69")	Ø300x173mm (11.81"x6.88")	Ø330x176mm (12.99"x6.92")	Ø355x181mm (13.97"x7.12")
Luminaire Net Weight		1.8kg(3.97Lbs)	2kg(4.41Lbs)	2.3kg(5.07Lbs)	2.6kg(5.73Lbs)
Working Temperature		-30℃ to +50℃(-22℉ to +122℉)			-30℃ to +45℃ (-22℉ to +113℉)
Storing Temperature		-40℃ to +70℃(-40℉ to +158℉)			

SWITCH GUIDE

Caution:
Please power off the luminaire before adjusting the DIP switch.
Please do not use metal tool to adjust the DIP switch.
Please adjust the switch gently.

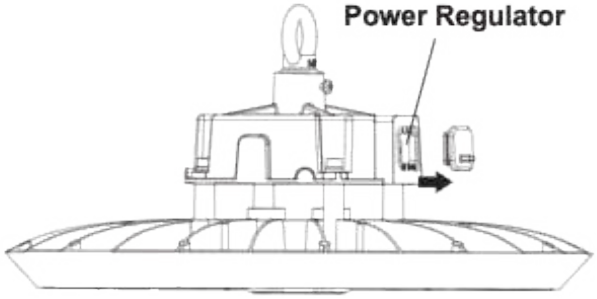

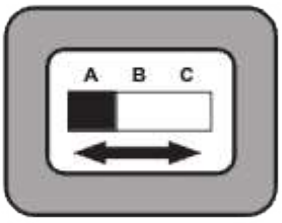

A: 100% B: 80% C: 60%

Power / Percentage	240W	200W	150W	100W
100%	240W	200W	150W	100W
80%	190W	160W	120W	80W
60%	145W	120W	90W	60W

*** The tolerance for power is ±10%**

SENSOR MOUNT

1 Zhaga sensor

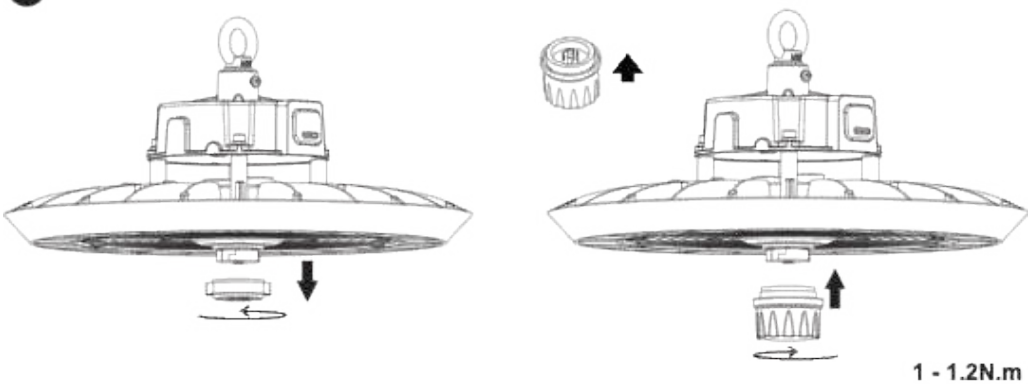

1 - 1.2N.m

2 1 pin sensor

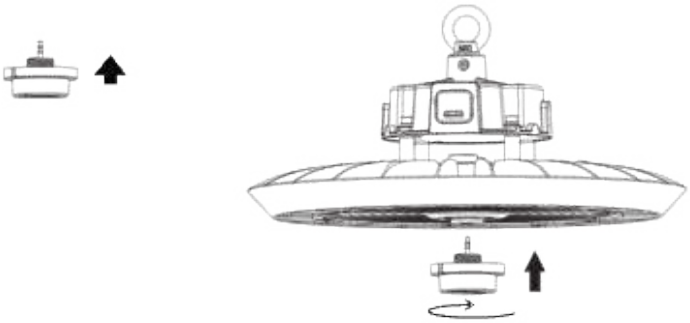

1 - 1.2N.m

SUSPENSION MOUNT

1. Make sure the screws are tightened

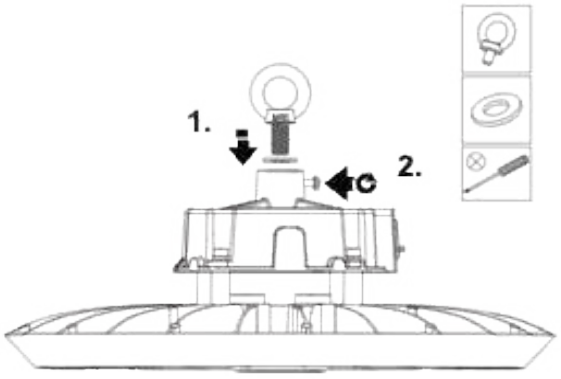

2.

Recommended Hook Size: Ø6x60mm/ Ø8x80mm

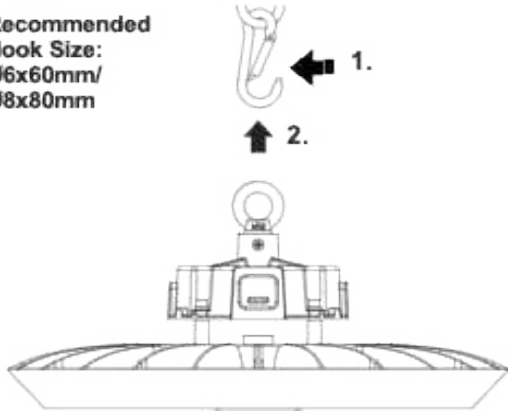

CEILING MOUNT

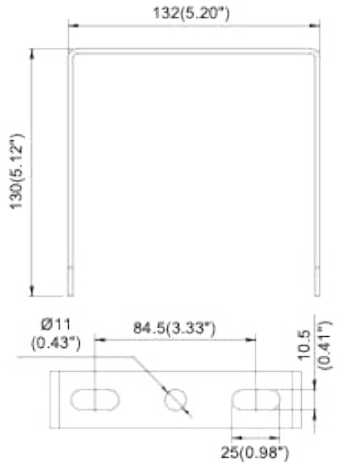

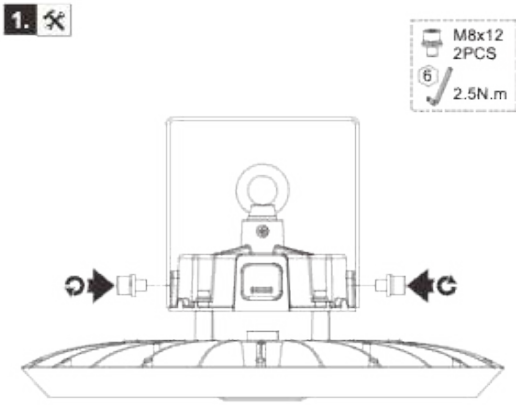

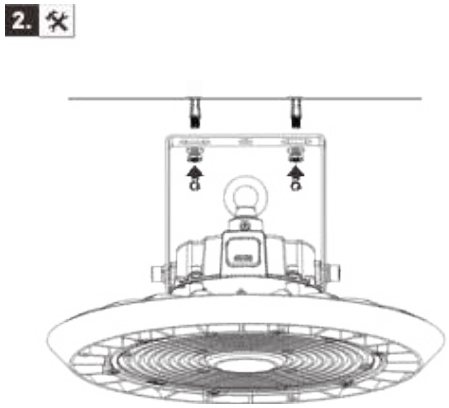

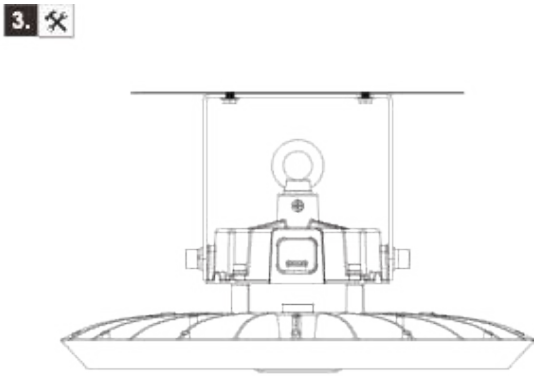

ALUMINIUM REFLECTOR

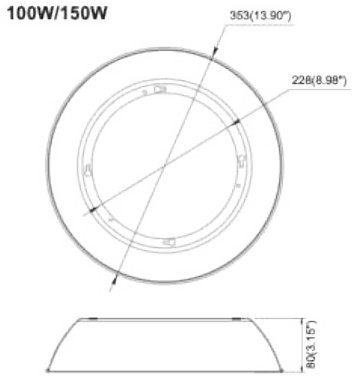

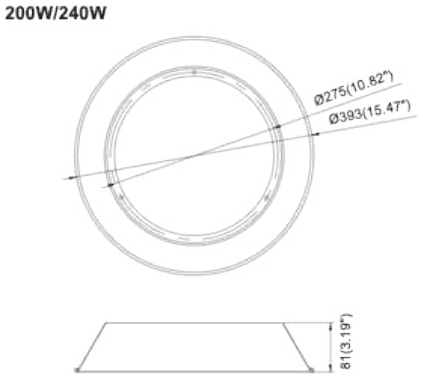

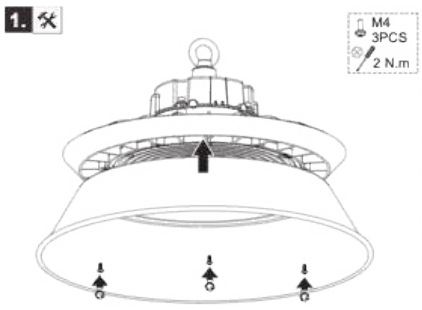

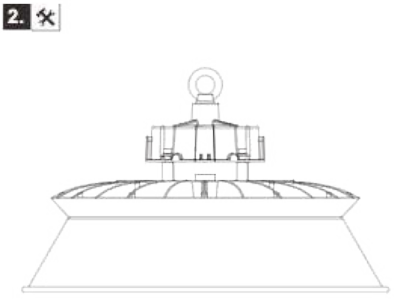

PC REFLECTORS & COVER

100W/150W

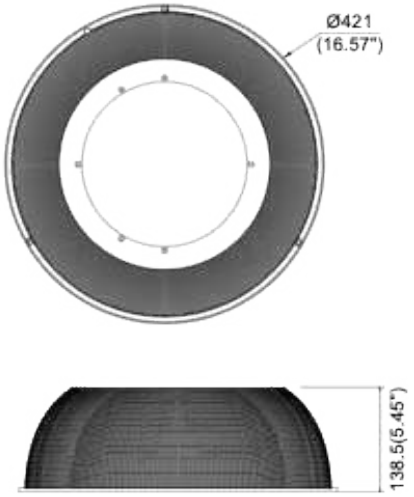

200W/240W

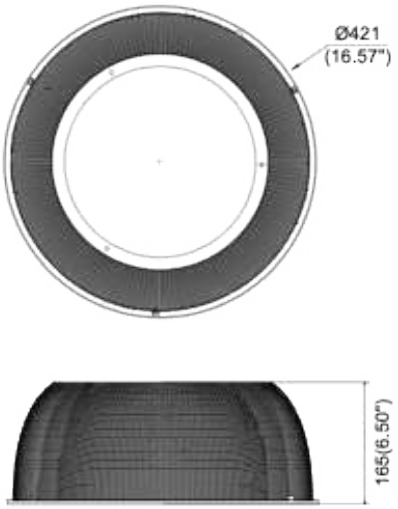

1.

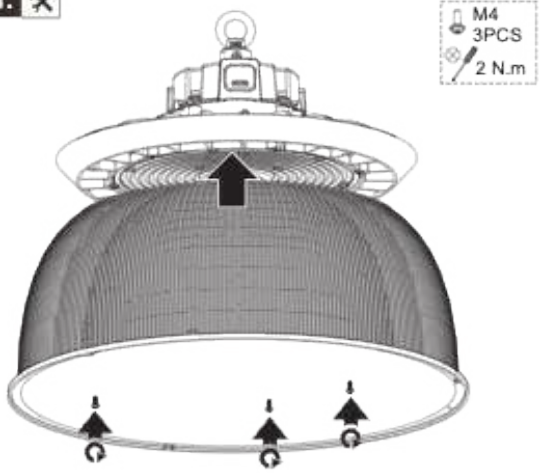

2.

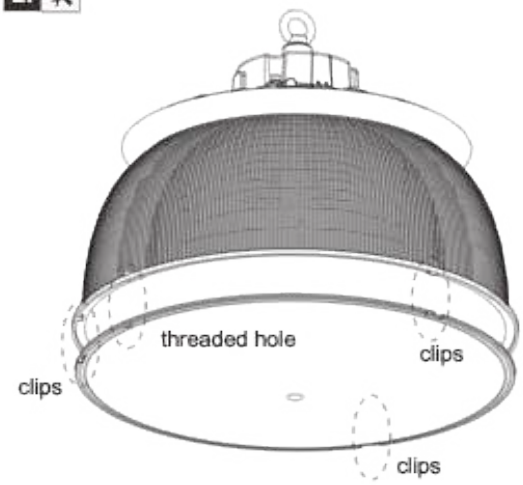

3.

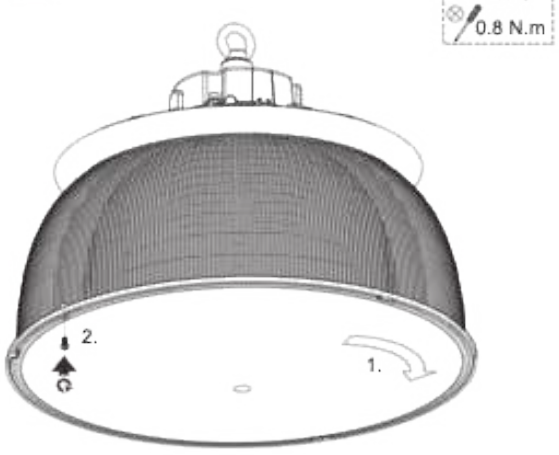

4.

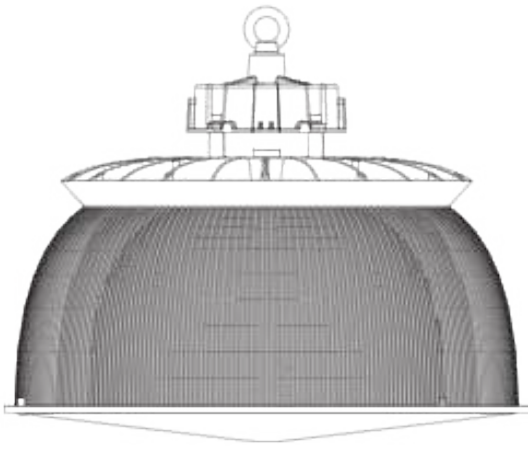

CONNECTIONS

AC cords

L	brown	|	black
N	blue	|	white
⏚	yellow/green	|	green

DIM cords

Note: color for dim cords subject to the cable label on luminaire



Warning! Do not wire dim cord to high voltage, or dim function will fail.

MAINTENANCE

The supply must be isolated before opening or accessing the luminaire. Product maintenance is critical to the products designed performance. Davis Lighting is not responsible for any product not maintained in accordance with the recommended procedure or intervals. It is recommended that a bi-annual cleaning cycle is implemented. Inspect optical surfaces for damage or crack. Products supplied with visors or covers must not be operate with a damaged visor or cover; it is recommended damaged visors or covers be replaced by a competent person immediately. Seals and electrical components such as wirings to be checked for deterioration.

All photometric and electrical data published are of ±10% tolerance. Characteristics and specifications may change without notice. All electrical installations / connections should be carried out by a suitably qualified person. Application images are indicative only and may not contain actual Davis Lighting product. The information contained in this publication is typical and must not be interpreted as a guarantee of individual product performance.



This product may contain substances that can be hazardous to the environment if not disposed of correctly. Electrical and electronic equipment should never be discarded along with general waste but should be separated for correct treatment and recovery. Packaging and waste materials should be recycled wherever possible.