FLORYN - FLU
Floodlight

Installation Instruction

This installation guide is valid for the following models:

- Floryn - FLU



PRIOR TO INSTALLATION

- Read all instructions to prevent injury, electric shock or damage due to fire or mechanical hazards
- See product label for supply specifications



Inspect the luminaire and associated parts for any signs of defect, in particular fasteners, cables and the diffuser or glass lens
DO NOT INSTALL THE LUMINAIRE IF IT APPEARS IN ANY WAY FAULTY
Consult with the supplier / sales office for details regarding replacement

CAUTION

- Before commencing installation, turn off and isolate the electrical supply
- Electronic control equipment must not be subjected to high voltages. DO NOT MEGGER between Live and Neutral
- All cable / conduit terminations must be installed in accordance with the designated IP rating of this product
- Suitable installation fastening methods should be employed to ensure the mounting points are not damaged when subjected to vibration and / or movement
- This luminaire must be installed by qualified electrician in accordance with local rules and codes
- This luminaire cannot be disassembled by non-professional persons
- If the external flexible cable or cord of this luminaire is damaged, it shall be exclusively replaced by the manufacturer or his service agent or a similar qualified person in order to avoid a hazard
- The light source contained in this luminaire shall only be replaced by the manufacturer or his service agent or a similar qualified person
- Prior to installation, products are to be stored in cool dry conditions

DIMENSIONS

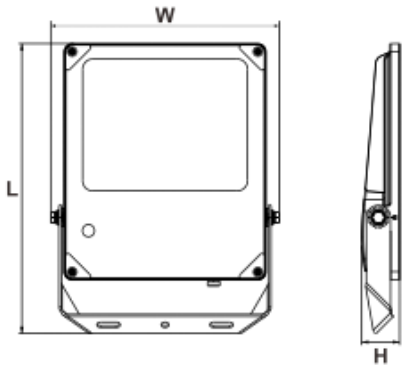

Power	L		W		H	
	mm	inch	mm	inch	mm	inch
50W	322	12.7	234	9.2	55	2.1
100W	366	14.4	315	12.4	55	2.1
150W	417	16.4	328	12.9	55	2.1
200W	456	18.0	390	15.3	55	2.1
240W	504	19.9	434	17.1	63	2.5
300W						
400W	604	23.8	442	17.4	65	2.6

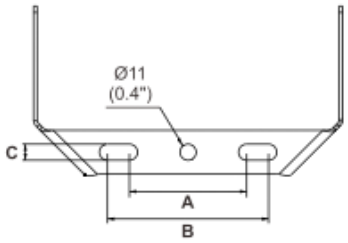

Power	A		B		C	
	mm	inch	mm	inch	mm	inch
50W	80	3.1	110	4.3	11	0.4
100W	134	5.3	176	6.9		
150W	140	5.5	185	7.3		
200W	168	6.6	222	8.7		
240W	189	7.4	249	9.8		
300W						
400W	192	7.6	254	10.0		

Product Specifications	50W	100W	150W	200W	240W / 300W	400W
Input Voltage	100-277VAC / 120-277VAC / 100-240VAC / 220-240VAC (Subject to the input voltage on nameplate)					
Power Frequency	50/60 Hz					
Luminaire Net Weight (±6%)	2.0kg (4.41Lbs)	3.0kg (6.61Lbs)	3.8kg (8.38Lbs)	4.6kg (10.14Lbs)	6.3kg (13.89Lbs)	8.3kg (18.30Lbs)
Working Temperature	-30°C to +50°C (-22°F to +122°F)					
Storing Temperature	-40°C to +70°C (-40°F to +158°F)					

SWITCH GUIDE

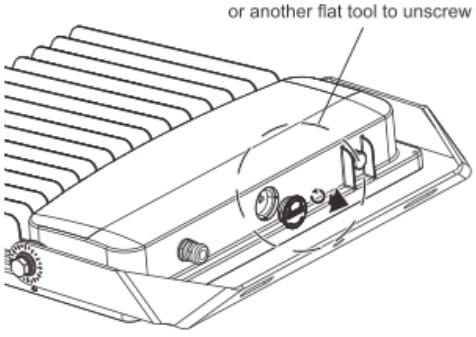

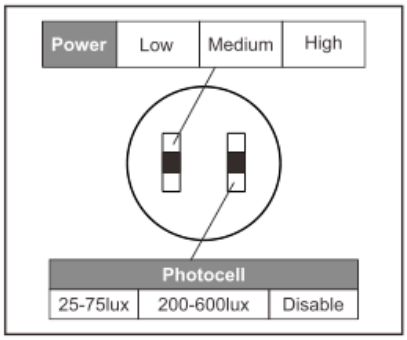

INSTALLATION

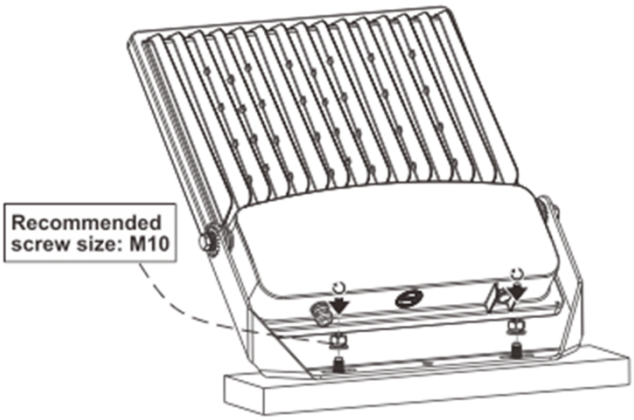

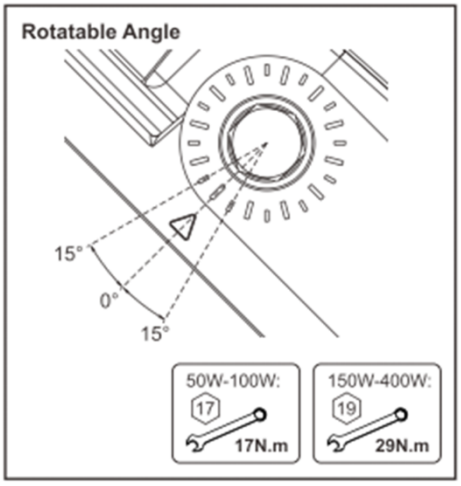

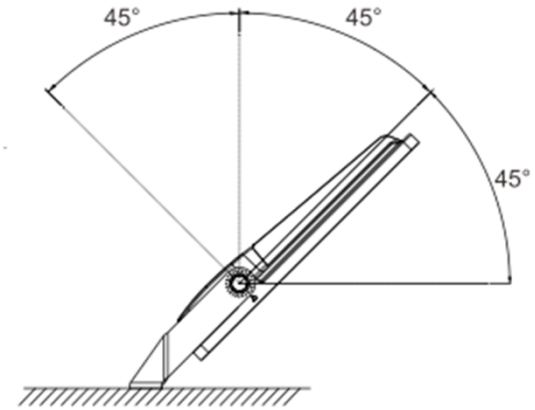

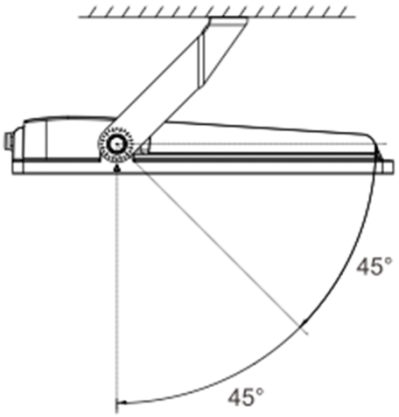

AC cords

L	brown	|	black
N	blue	|	white
⏚	yellow/green	|	green

DIM cords

Note: color for dim cords subject to the cable label on luminaire

Warning! Do not wire dim cord to high voltage, or dim function will fail.



PRECAUTIONS

Lightning is a common natural phenomenon. When the accumulation of electric charge in the thundercloud to a certain degree, air breakdown will occur to cause electrostatic discharge between the clouds, or between the cloud and the earth. Normally there are direct lightning and induction lightning, most LED luminaires damage caused by induction lightning, such as electrostatic induction or magnetic field induction.

Below pretreatment can reduce lightning hazard, and extend luminaire lifetime.

1. LED luminaire should be effectively grounded

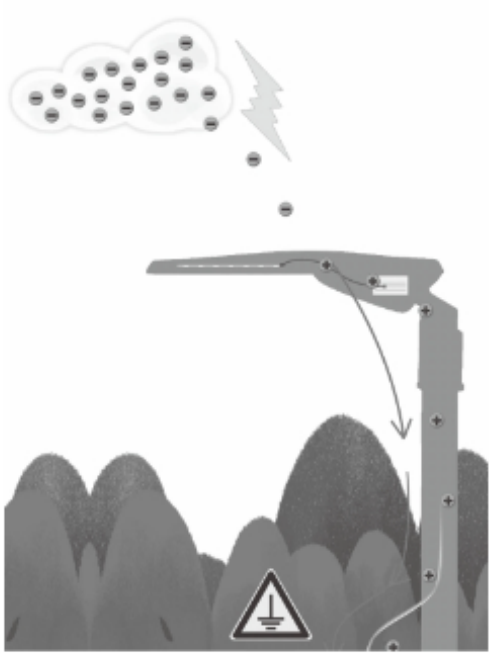

With effective grounding, the electric charge can be introduced to ground quickly

2. Install surge protector in power distribution box



The SPD can absorb most surge energy before luminaire

MAINTENANCE

The supply must be isolated before opening or accessing the luminaire. Product maintenance is critical to the products designed performance. Davis Lighting is not responsible for any product not maintained in accordance with the recommended procedure or intervals. It is recommended that a bi-annual cleaning cycle is implemented. Inspect optical surfaces for damage or crack. Products supplied with visors or covers must not be operate with a damaged visor or cover; it is recommended damaged visors or covers be replaced by a competent person immediately. Seals and electrical components such as wirings to be checked for deterioration.

All photometric and electrical data published are of ±10% tolerance. Characteristics and specifications may change without notice. All electrical installations / connections should be carried out by a suitably qualified person. Application images are indicative only and may not contain actual Davis Lighting product. The information contained in this publication is typical and must not be interpreted as a guarantee of individual product performance.

This product may contain substances that can be hazardous to the environment if not disposed of correctly. Electrical and electronic equipment should never be discarded along with general waste but should be separated for correct treatment and recovery. Packaging and waste materials should be recycled wherever possible.